SAMPLE REPORT

Lightweight bearing housing: topology optimization, CAD reconstruction and verification

About this document. This is a sample. The part is generic and the load case is illustrative; no customer data is involved. It shows the structure, the level of detail and the kind of statements a project report contains. Every result in it comes from a computation that was actually run: nothing is mocked up.

MASS	STIFFNESS AT THE BORE	CAD MODEL	VERIFICATION
0.88 kg	**454** kN/mm	**118** faces	**1.9** %
down from 2.51 kg for the solid housing: –65 %	53 % of the solid housing, with 35.0 % of its material	one closed solid; the bore and the bolt holes are kept exactly	difference in stiffness between two analyses that share no mesh

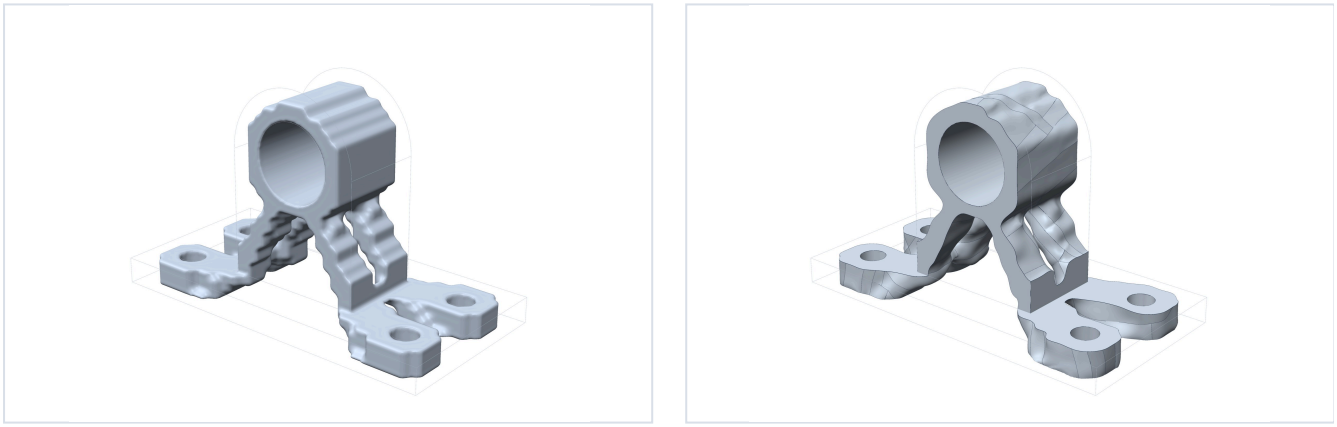

Figure 1. Left: the optimized material layout, a faceted surface. Right: the same shape rebuilt as a CAD solid; the lines are the boundaries of its 118 faces. The thin outline is the solid housing the optimization started from.

Summary

- A bearing housing carrying a shaft load of 14.4 kN was optimized for stiffness, using at most 35 % of the material of the solid design. The bore and the four bolt holes were kept.
- The optimized layout was rebuilt automatically as a CAD solid of 118 faces. The bore and the bolt holes are the original cylinders; the new surfaces follow the optimized shape to within 0.23 mm over 95 % of their area.
- The rebuilt solid, not the optimizer's intermediate result, was analysed again under the same load, with two different discretizations at several resolutions. Its stiffness is 454 kN/mm; on their finest meshes the two methods agree to within 1.9 %.
- The re-analysis also found two things the optimizer's result does not show: on its own grid the optimizer overstates the stiffness by 9 %, and the peak stress has **not** converged with mesh refinement. Section 5 explains both, and what would be done about them in a project.

1 Task

Part	Bearing housing: base plate 160 × 80 × 12 mm with four bolt holes ⌀ 12 mm, pedestal with a bore ⌀ 36 mm; 160 × 80 × 102 mm overall. This solid is the design space
Material	Steel, linear elastic: E = 210 GPa, ν = 0.3, density 7850 kg/m³
Support	The surfaces of the four bolt holes are held
Load	14.4 kN downward from the shaft: a pressure on the lower half of the bore, 10 MPa at the bottom and falling to zero at the sides
Objective	Largest stiffness under this load (smallest work of the load)
Constraint	At most 35 % of the volume of the solid housing
Kept	The bore, the bolt holes and one layer of cells around them may not be removed
Scope	One static load case, small deformations. No strength, fatigue, buckling or manufacturing constraints: see section 5

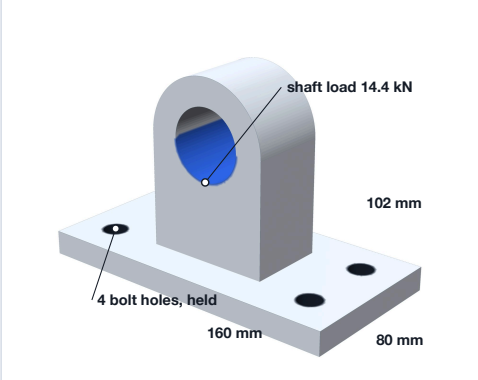

Figure 2. The solid housing: design space, support (dark) and loaded face (blue).

The solid housing is the reference: it weighs 2.51 kg and, under the same load, its bore deflects 16.8 µm (859 kN/mm).

How stiffness is measured

Deflection is the work of the load divided by the load: the mean deflection of the loaded half of the bore, weighted by the pressure. Stiffness is the load divided by this deflection. This is the quantity the optimizer improves, and it does not depend on the choice of a measuring point.

2 Optimization

The housing is placed in a regular grid with cells of 4.1 mm; 6 028 of them lie in the part (29 664 unknowns). Each cell has its own material density between 0 and 1. The optimizer moves material to where it carries load, keeping the total at 35 %; a projection step then sharpens the result into solid and void.

The run was stopped after 100 iterations. Over the last 20 the objective changed by 0.82 %, and the volume constraint is met (35.0 %). The steps in Figure 3 are the stages of the projection.

The result is the layout of Figure 1, left: the part of the housing where the density exceeds one half.



Figure 3. Convergence of the objective.

3 CAD reconstruction

The faceted layout was rebuilt as a boundary representation: its surface is divided into four-sided regions, a smooth spline surface is fitted to each, and neighbouring surfaces are joined along shared edges. The result is then cut with the original housing, so that everything the optimizer left untouched (the bore, the bolt holes, the underside) is the original, exact face and not a fitted copy of it. Figure 1, right, shows the solid.

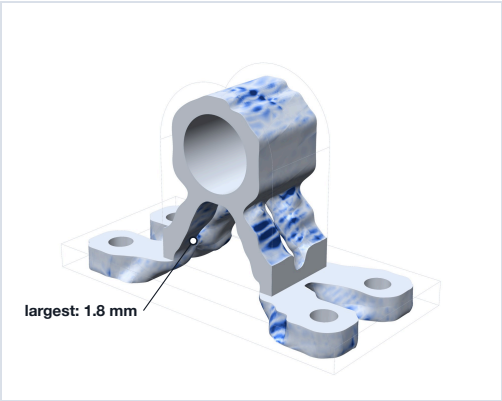

Figure 4. Distance between the new CAD surfaces and the optimized layout. For scale: the cells of the optimization are 4.1 mm wide.

0 ≥ 0.4 mm

Topology	One closed solid, 118 faces; validity check passed
Functional faces	Kept as the original cylinders: bolt holes 100.0 %, loaded half of the bore 99.9 % of their area
Volume, mass	112.2 cm³ = 35.0 % of the solid housing (limit 35 %); 0.88 kg

Deviation of the new surfaces from the layout	mm
Mean	0.08
95 % of the surface is closer than	0.23
99 % of the surface is closer than	0.44
Largest	1.8

4 Verification

Fitting smooth surfaces moves the boundary slightly, so the rebuilt part is not the part the optimizer evaluated. It was therefore analysed again, as a solid of full material, under the load and support of section 1, with two discretizations that share no mesh: (A) the solid placed in a regular grid of spline elements that it cuts through, at four cell sizes; (B) meshes of quadratic tetrahedra fitted to the CAD faces, at three sizes.

Analysis	Unknowns	Reaction, kN	Bore deflection, µm	Stiffness, kN/mm	Peak von Mises, MPa
A1 · grid, cells 4.1 mm	21 372	14.40	28.6	503	195
A2 · grid, cells 2.7 mm	51 687	14.40	30.4	474	234
A3 · grid, cells 2.0 mm	98 946	14.40	30.7	470	294
A4 · grid, cells 1.5 mm	201 762	14.40	31.1	463	368
B1 · fitted mesh, 11 084 elements	61 845	14.36	31.5	456	294
B2 · fitted mesh, 22 828 elements	122 817	14.37	31.5	456	384
B3 · fitted mesh, 49 898 elements	**256 032**	**14.39**	**31.7**	**454**	**495**
Optimizer's own value (section 2), cells 4.1 mm	29 664	14.40	29.0	496	–

Reaction: the force at the bolt holes, that is the load actually applied. Bore deflection and stiffness: as defined in section 1.

What the table shows

- **The full load arrives.** Every grid analysis returns 14.40 kN: the loaded half of the bore is there in full. The fitted meshes apply up to 0.3 % less, because they replace the round bore by flat element faces; the shortfall shrinks with refinement.
- **The two methods meet.** The fitted meshes barely move (456, 456, 454 kN/mm: within 0.3 %). The grids come down towards them (503, 474, 470, 463). On the finest meshes the difference is 1.9 %. The value quoted in this report is B3.
- **The optimizer's own value is 9 % too high.** The cause is the coarse grid, not the reconstruction: analysis A1, of the rebuilt solid on the same 4.1 mm grid, is just as optimistic. A grid that is fine enough to find the layout is not fine enough to quote its stiffness.
- **Peak stress has not converged.** It rises with every refinement in both methods, from 195 to 495 MPa, so it is not a result. Half of the surface is below 18 MPa, 95 % of it below 74 MPa.

5 Findings and limits

- **Result.** 454 kN/mm at 0.88 kg, against 859 kN/mm at 2.51 kg for the solid housing: 53 % of the stiffness with 35.0 % of the material. Per kilogram, the optimized housing is 51 % stiffer.
- **Geometry.** The CAD model is one valid, closed solid. The bore and the bolt holes are the original cylinders. The new surfaces follow the optimized layout to within 0.23 mm over 95 % of their area; the largest deviation, 1.8 mm, is local.
- **Confidence in the stiffness.** The number belongs to the geometry that is handed over, not to the optimizer's intermediate model. Two analyses that share no mesh bracket it: 454 kN/mm from the fitted mesh, 463 kN/mm from the finest grid and still falling.
- **Finding: the coarse grid flatters.** Read off the optimization grid, the stiffness would have been reported 9 % too high. The optimization grid is chosen for speed; a reported number has to come from a refinement study like the one in section 4.

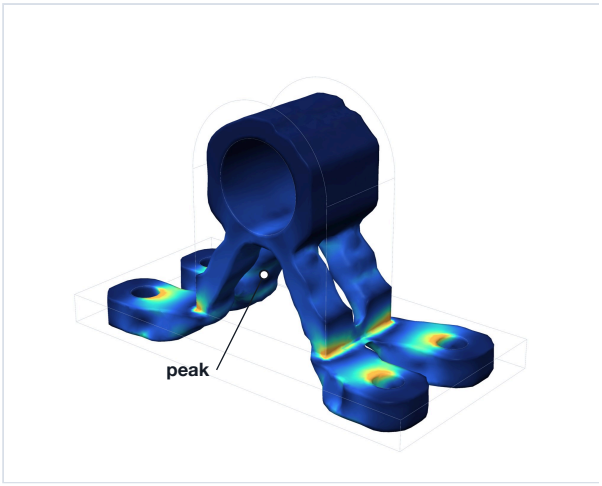

Figure 5. Von Mises stress on the rebuilt part, analysis B2. The peak is marked.

Limits

- **Stress.** The peak sits in a sharp inner corner inherited from the solid housing, where the pedestal meets the base plate (Figure 5). In theory the stress in a sharp inner corner is unbounded, so refinement raises the value without limit. A real housing has a fillet there: a strength or fatigue assessment needs that radius in the model and a local refinement study. The same applies at the rims of the bolt holes, which are held rigidly here.
- **Convergence of the optimization.** The run ended at its iteration limit, not at a convergence criterion. The remaining drift, 0.82 % over 20 iterations, is small against the 9 % of the grid.
- **One load case.** A part optimized for a single load direction is weak in the others, and a bearing also sees sideways and axial loads. A project uses the full set of load cases, and usually a limit on stress or deflection in place of a fixed volume.
- **Manufacturing.** No minimum member size, overhang angle or draw direction was imposed. For additive manufacturing or casting these constraints change the layout and belong in the optimization, not after it.
- **Stability.** The analysis is linear with small deformations. Buckling of the slender legs is not checked.

6 What is handed over

Item	Format	Content
CAD model	STEP (AP214), IGES	The rebuilt solid of section 3, to open and edit in a CAD system
Optimized layout	OBJ surface, VTK field	The faceted layout and the density field behind it
Analysis models	Input files, text	The models of sections 2 and 4, so every number in this report can be reproduced
Results	VTK	Displacement and stress fields of analyses A and B, readable with standard post-processing tools
This report	PDF	Assumptions, results, verification and limits

Desimula · computational mechanics · contact@desimula.com · desimula.com
Sample report SR-01, revision B. Generic part, illustrative load case. Not for design use.